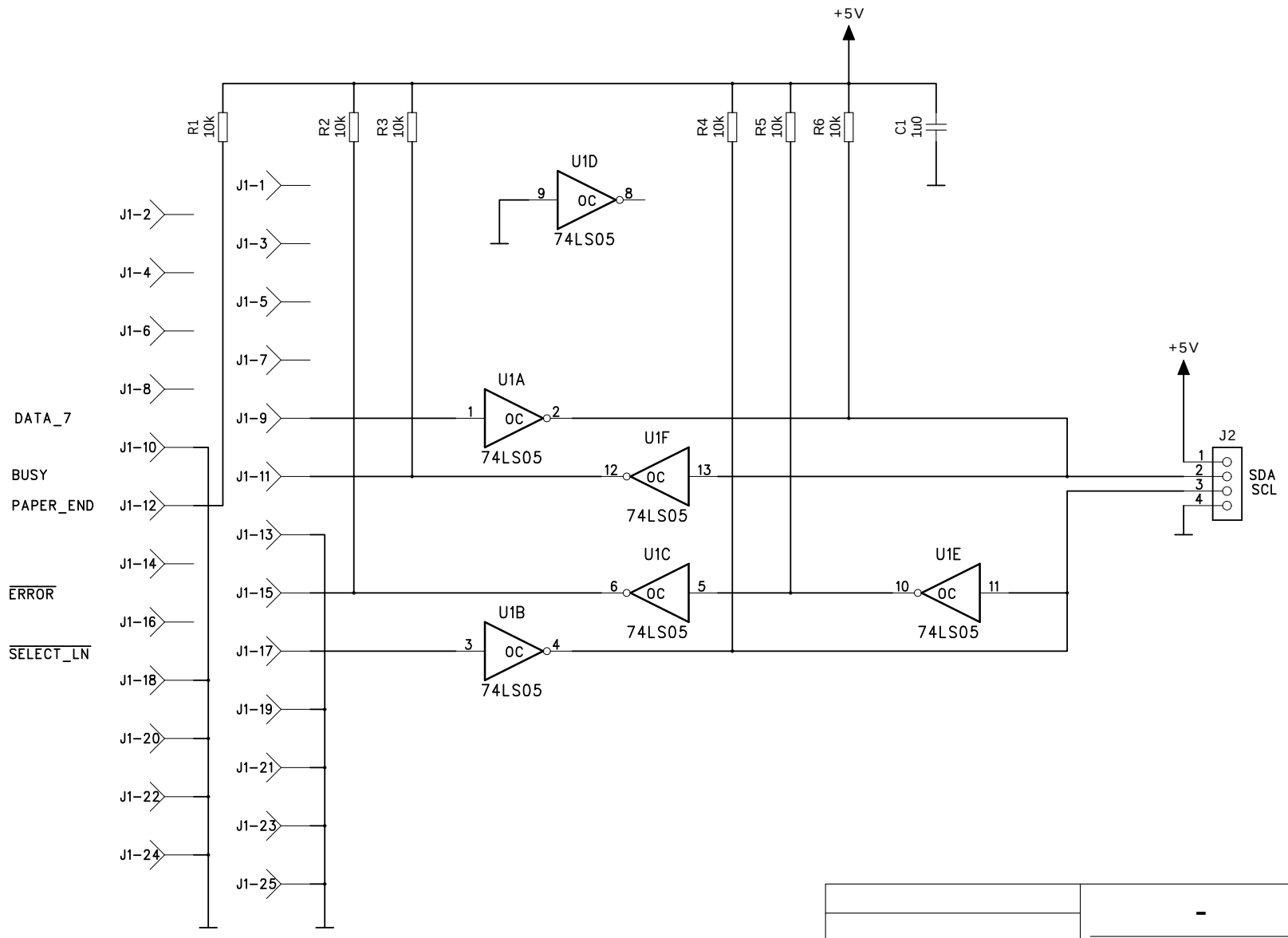

DB25 male to cable

	-
	Centronics to I2C
Drawn: oh4mvh	
	Sheet: 1 of 1