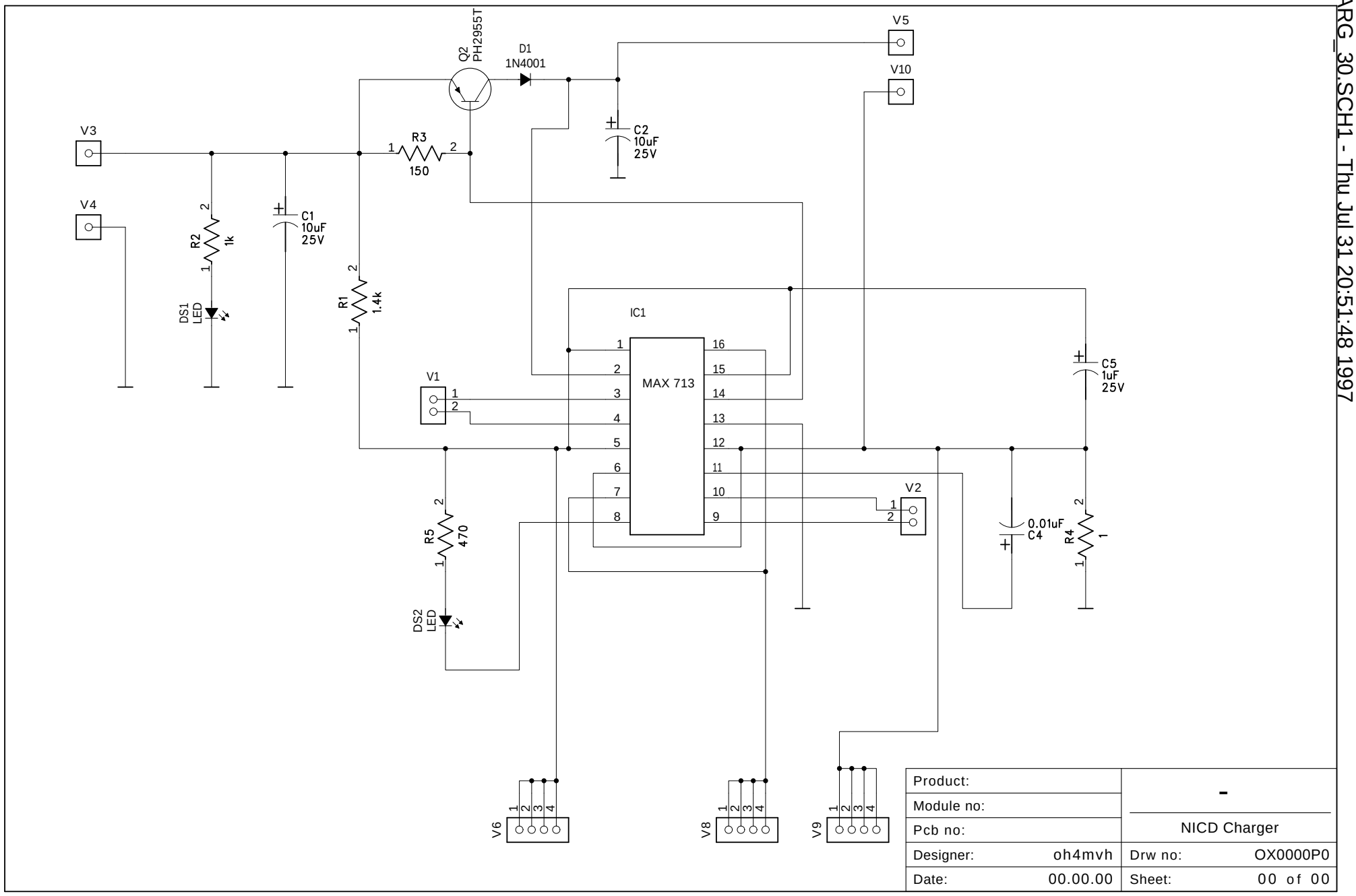

Product:		-	
Module no:			
Pcb no:		NICD Charger	
Designer:	oh4mvh	Drw no:	OX0000P0
Date:	00.00.00	Sheet:	00 of 00

CHARG_30.SCH1 - Thu Jul 31 20:51:48 1997